SPECIFICATION
产品规格书

产品型号
Product P/N ： HYF68X43B385AG-X4A

深圳市盈锋光电有限公司
Shenzhen Yingfeng Opto-Electronic Co., Ltd

Tel: 0086-755-81707311
E-Mail:hehualan@chyingfeng.com

地址:深圳市光明区光明街道碧眼社区光伟路1201号华强创意产业园1栋B座503
Adr:Room 503, Block B, Building 1, Huaqiang Creative Industrial Park, No. 1201 Guangwei Road, Biyan Community, Guangming Street, Guangming District, Shenzhen City Guangdong China

Product Description 产品描述

WARNING

- UV LEDs emit high intensity UV(ultraviolet) light.
- Do not look directly into the UV light source ; this can be harmful to your eyes and skin.
- Wear protective eyewear to avoid exposure to UV light, as well as protective masks and gloves, etc.in order not to expose your skin to the light.
- Attach warning labels to your products which contain UV LEDs.

Features

- Ceramic and quartz package
- Size(mm):6.8*6.8*4.35
- Lens Viewing Angles:60°
- Available on tape and reel
- Low Thermal Resistance
- RoHS and REACH compliant

产品特征

- 陶瓷 + 石英封装
- 尺寸: 6.8*6.8*4.35(mm)
- 镜头角度: 60°
- 适用于载带及卷轴
- 低热阻
- RoHS和REACH 兼容

Applications

- Machine vision systems
- Spectral Analysis
- Counterfeit Detectors
- Sensor light/fiber coupling
- Medical & Healthcare
- 3D Printing
- Endoscopy
- Scientific Instrumentation
- UV drying of printing inks and lacquers

产品应用

- 机器视觉系统
- 光谱分析
- 防伪检测
- 传感器/光纤耦合
- 医疗和保健
- 3D打印
- 内窥镜检查
- 科学仪器
- UV干燥油墨和油漆

Product Size 产品尺寸

封装尺寸

Package Dimensions

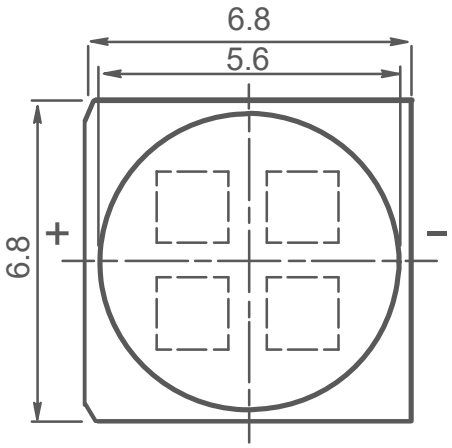

Fig.1-1 Top view 正面视图

推荐焊接

Recommended Soldering

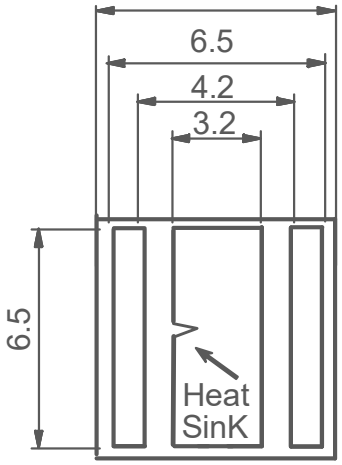

Fig.1-2 Bottom view 背面视图

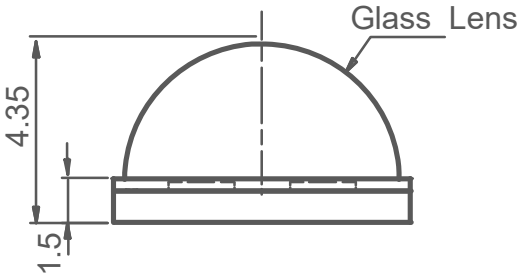

Fig.1-3 Side view 侧面视图

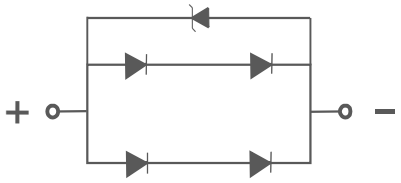

Fig.1-4 Polarity 极性

Notes备注:

1.All dimensions units are millimeters.所有尺寸标注单位为毫米

2.All dimensions tolerances are ±0.2mm unless otherwise noted.除特别标注外,所有尺寸公差为±0.2 毫米

Product Parameters 产品参数

Table 1-1 Electrical / Optical Characteristics at Ts=25°C电性与光学特性

Test Conditions测试条件:IF=2000mA

Symbol 符号	Parameter 参数	Min 最小	Typ 典型	Max 最大	Units 单位
Ie	Radiant Intensity 辐射强度	-	5582	-	mW/sr
Po	Radiation Power 辐射功率	5500	6500	-	mW
VF	Forward Voltage[1] 正向电压	6.0	6.8	-	V
λ_p	Peak Wavelength 峰值波长	380	-	390	nm
λd	Dominant Wavelength主波长	-	-	-	nm
△λ	Half Width 半波宽	-	11	-	nm
2θ1/2	50% power angle发光角度	-	60	-	deg
IR	Reverse Current 反向电流	-	20	-	uA
VR	Reverse Voltage 反向电压	-	5	-	V

Notes 备注:

1. 1/10 Duty cycle, 0.1ms pulse width. 脉宽0.1ms,占空比1/10.
2. The above forward voltage mea sure men tall owance tolerance is 0.1V 以上所示电压测量误差 ±0.1V
3. The above wavelength measurement allowance tolerance is ±2nm. 以上所示波长测量误差±2nm.
4. The above radiation flux measurement allowance tolerance ±10%.上述辐射功率的测试允许公差为±10%
5. Care is to be taken that power dissipation does not exceed the absolute maximum rating of the product. 使用功率不能超过规定的最大值。
6. All measurements were made under the standardized environment of Yingfeng 所有测试都是基于盈锋现有的标准测试平台。

Absolute Maximum Ratings at Ts=25°C(绝对最大值)
Test Conditions 测试条件:IF=2000mA

Symbol 符号	Parameter 参数	Absolute Maximum Rating 绝对最大额定值	Units 单位
Pd	Power dissipation[1] 电功率	13600	mW
IF	DC Forward Current[1] 正向电流	2000	mA
IFp	Peak Forward Current 峰值电流	2000	mA
Rthja	Thermal Resistance 热阻	8	k/w
Tj	Junction Temperature 结温	100	℃
Topr	Operating Temperature工作温度范围	-40~+85	℃
Tstg	Storage Temperature 储存温度范围	-40~+100	℃

Notes 备注:

When the LEDs are in operation the maximum current should be decided after measuring the package temperature, junction temperature should not exceed the maximum rate. LED

使用的最大电流需要根据散热条件确定，结温不能超过最大值。

Notes 备注:

1.U.S.L:Upper standard level规格上限L.S.L:Lower standard level规格下限

2. The above reliability tests is based on the verification of a single/strip LED of Yingfeng's existing experimental platform, the reliability experiment was taken under good heat dissipation conditions. when customers applies the LED to the series and parallel circuit, should take consideration of all the factors such as the current,voltage distribution,heat dissipation and others以上可靠性测试是基于盈锋现有实验平台单颗/条LED在良好散热条件验证下的结果。客户端将LED应用于串、并联线路时，需自行评估电流、电压分配、散热等问题。

3.The technical information shown in the data sheets is limited to the typical characteristics and circuit examples of the referenced products. It does not constitute the warranting of industrial property nor the granting of any license.以上技术数据仅为产品的典型值，只作为参考，不作为任何应用条件及应用方式的保证。

Product Bin 产品分Bin，Ta = 25℃, RH 60%, IF =2000mA

BIN	Peak Wavelength[nm] 峰值波长	Radiation Power[mW] 辐射功率	Forward Voltage[V] 正向电压
1#	380-390	5500-6500	6.0-6.8
2#			
3#			
4#			
5#			
6#			
7#			
8#			
9#			
10#			

Typical Optical/Electrical Characteristics Curves典型光学电性曲线 (Ta=25℃Unless Otherwise Noted)Ta=25 ℃ (除非另有注释)

Ambient Temperature vs. Forward Current

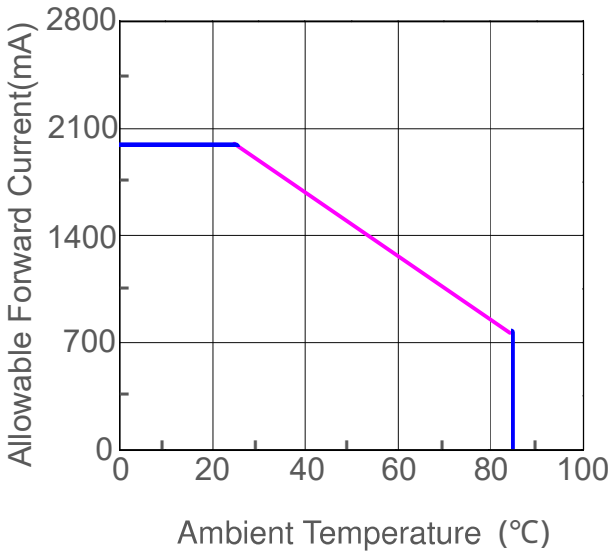

Ambient Temperature vs. Relative Radiant Flux

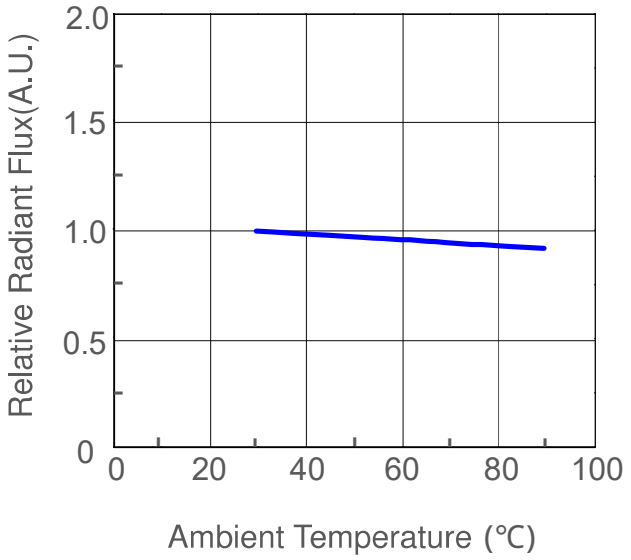

Forward Voltage vs. Forward Current

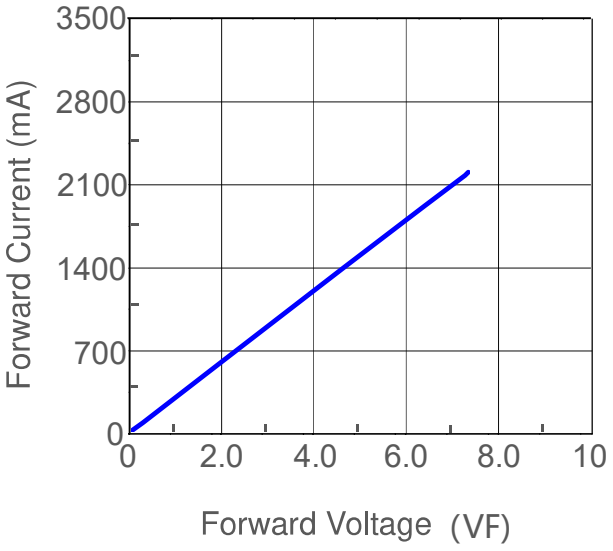

Forward Current vs. Relative Radiant Flux

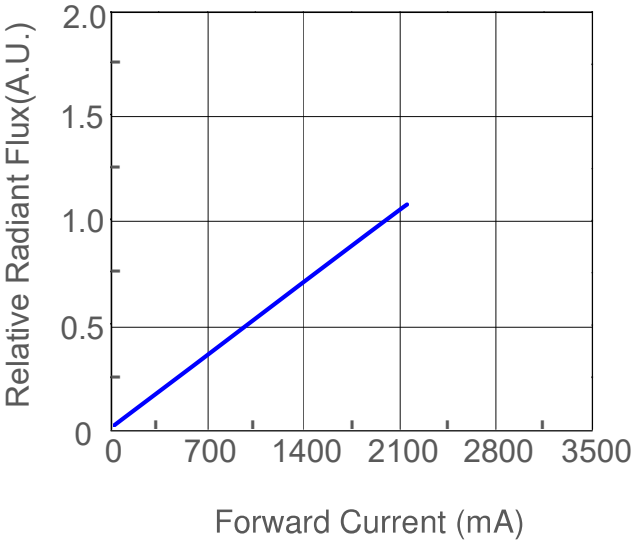

Typical Optical/Electrical Characteristics Curves 典型光学/电性特征曲线
(Ta=25℃ Unless Otherwise Noted) (Ta=25℃除非另有注释)

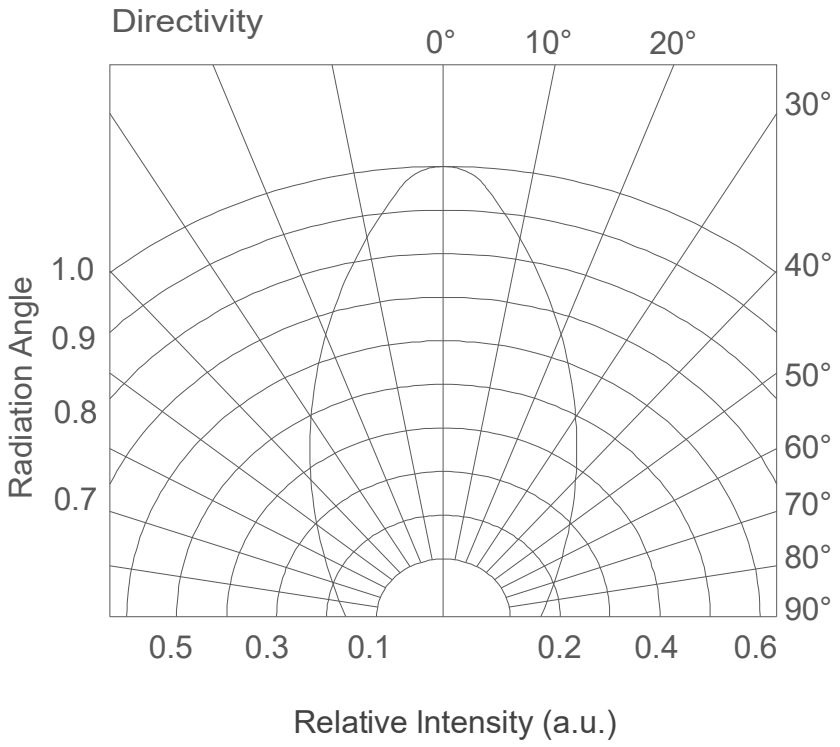

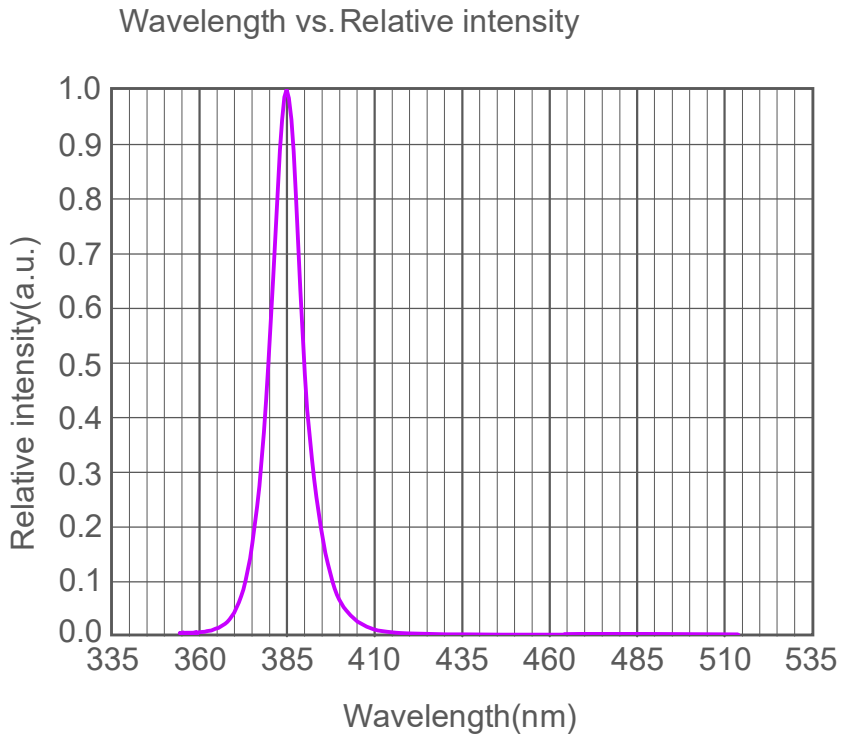

Packaging Specification 包装规格

Reel Packaging 250pcs/Reel （卷带包装250pcs/卷）

Carrier Tape Dimension 载带尺寸

The Hole Side on theTape is Cathode(载带有孔的一边为负极)

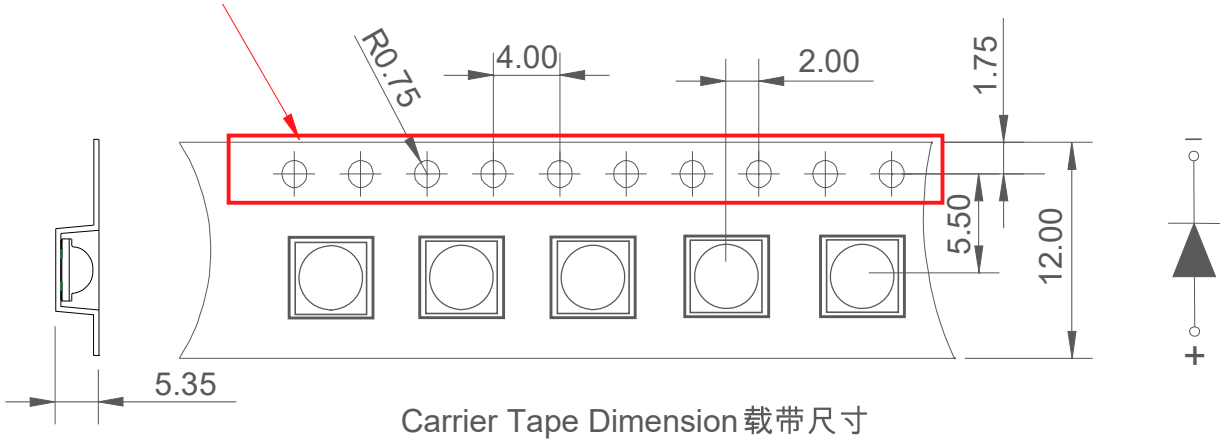

Carrier Tape Dimension 载带尺寸

Reel Dimension 卷盘尺寸

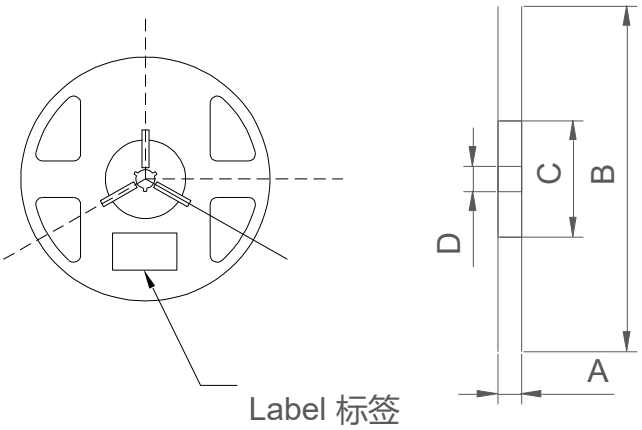

Reel Dimension 卷盘尺寸

A	12±0.1mm
B	178±1mm
C	60±1mm
D	13.0±0.5mm

Moisture Resistant Packing 防潮包装

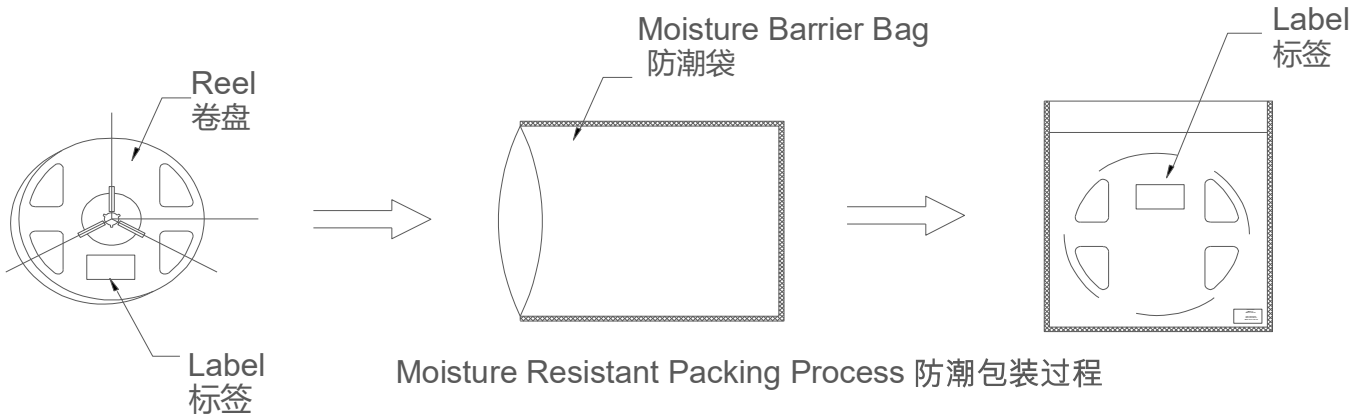

Moisture Resistant Packing Process 防潮包装过程

Product Parameters 标签规格

Label Form Specification 标签规格

深圳市盈锋光电有限公司 Shenzhen Yingfeng Optoelectronics Co., Ltd.	
Part NO:	
Ltem No:	
Color:	Date：
Po:	WLP:
VF:	QTY（PCS）:

Label Form Specification 标签规格	
PART NO	Part Number 品名
Po	Radiant Power 辐射功率
VF	Forward Voltage 正向电压
WLP	Wavelength 波长代码
QTY	Packing Quantity 包装数量
DATE	Date 日期

Inner Box 内箱

Capacity 4 or 10 reels per box(内箱容量:4或10卷)

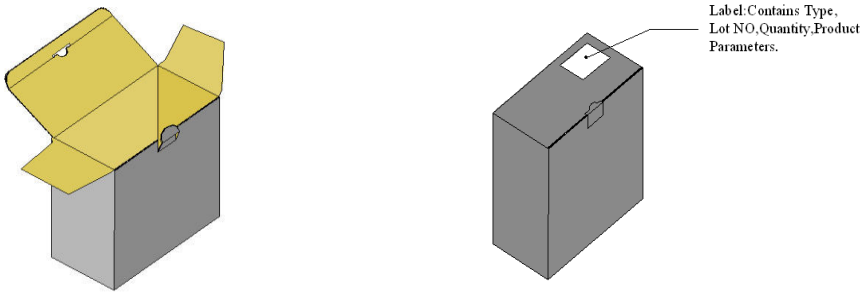

Outer Box 外箱

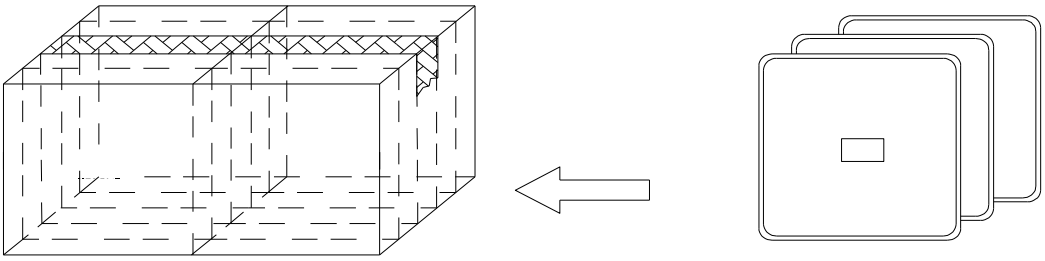

Cardboard Box 包装纸箱

SMT Reflow Soldering Instructions SMT 回流焊说明

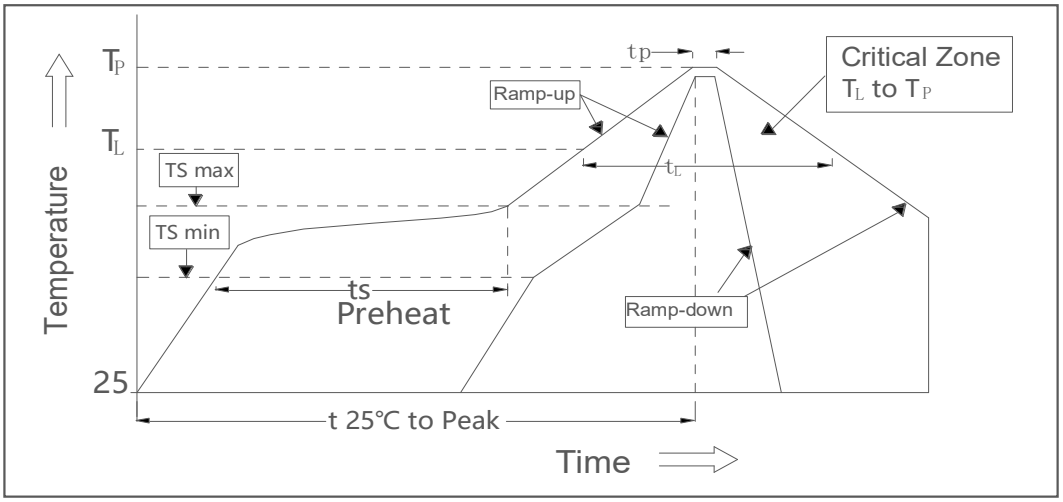

SMT Reflow Soldering Instructions SMT回流焊说明

Average temperature rise speed 平均升温速度（ Tsmax至Tp ）	Max 3 °C/ s 最高3 °C/秒
Preheating: minimum temperature 预热：最低温度（ Tsmin)	150 °C
Preheating: Time 预热：时间（ Tsmin 至Tsmax ）	200 °C
Time limited to maintain high temperature: the temperature 限时维持高温：温度（ T⊥）	60s - 120s 60 - 120秒
Time limited to maintain high temperature: The Time 限时维持高温：时间 (ti))	217 °C
Peak /Classification of temperature: 峰值 / 分类温度（TP)	Max 60s 最多60秒
Time limit classification of peak temperature time 限时峰值 分类温度：时间（tp）	260 °C
Hold time within 5Cwith the actual peak temperature(TP) 与 实际峰值温度（ TP)相差5°C以内的保持时间	Max 10s 最多10秒
Coolingspeed 降温速度	Max 30s 最多30秒
Needed time from25°CtoTp25°C升至峰值温度所需时间	Max 6 °C/ s 最高6 °C/秒
Needed time from25 °C to Tp 25 °C 升至峰值温度所需时间	Max 8 minutes 最多8分钟

Notes 备注:

(1)Reflow soldering should not be done more than twice. If more than 24 hours between the two solderings , LED will be damaged. 回流焊次数不可以超过两次，两次回流焊的时间间隔如果超过24小时，LED可能由于吸湿而损坏。

(2)When soldering , do not put stress on the LEDs during heating.
当焊接时，不要在材料受热时用力压胶体表面。

(3) It is recommended that use the middle temperature solder paste.
在回流焊接过程中,不要对 LED 施加任何压力.

(4)Stress on the LEDS should be avoided during heating in soldering process.
After soldering ,do not deal with the product before its temperature drop down to room temperature.
在焊接完成后,待产品温度下降到室温后,再进行其它处理.

Soldering Iron烙铁焊接

(1) When do soldering by hand, keep the temperature of iron below less 300 ℃ less than 3 seconds.
手工焊接时，烙铁的温度必须小于 300℃，时间不可超过 3秒。

Soldering hand手工焊接

(2) Soldering by hand should be done only one time.手工焊接只可焊接一次。

Repairing修补

Repairing should not be done after the LEDs have been soldered.When repairing is unavoidable,a double-head soldering iron should be used (as below figure). It should be confirmed in advance whether the characteristics of LEDs will or not be damaged by repairing.
LED回流焊后不应该修复，当必须修复时，必须使用双头烙铁，而且事先应确认此种方式会不会损坏LED本身的特性。

Cautions注意事项

(1) Do not apply excessive force to the PKG, especially glass lens parts.
It might cause the catastrophic failures such as chipping, delamination and so on.

玻璃封装产品不能过度承受外力，特别是玻璃透镜部分，如若不然，将会导致透镜如分层，脱落等灾难性的不良。

(2) Components should not be mounted on warped (non coplanar) portion of PCB. After soldering, do not warp the circuit board.LED 灯珠不要焊接在弯曲的 PCB 板上，焊接之后，也不要弯折线路板。

(3) Do not apply mechanical force or excess vibration during the cooling process to normal temperature after soldering. Do not rapidly cool device after soldering.回流焊之后冷却过程中不要对材料实加外力，也不要有震动，回流焊后，不要采用激剧冷却的方式。

(4) Do not press or touch the PKG, especially lens during SMT process.
SMT 操作过程中，不要按或者接触封装体，特别是透镜。

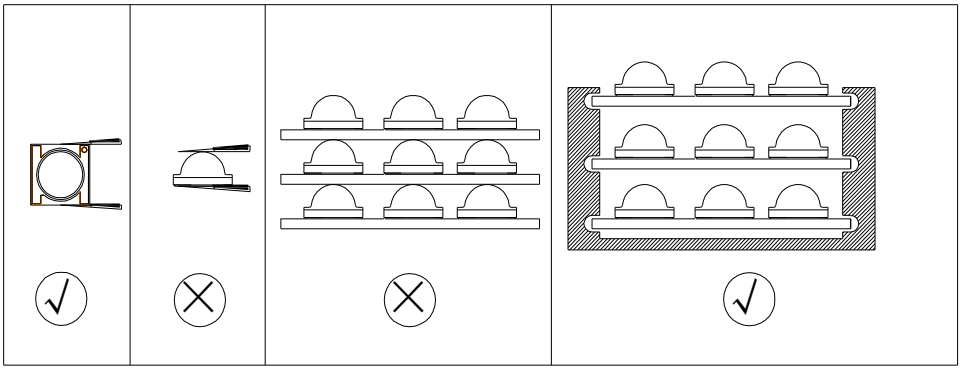

Operate Method 操作方法

5.In designing a circuit, the current through each LED can not exceed the absolute maximum rating specified for each LED.In the mean while,resistors for protection should beapplied,other wises light voltage shift will cause big current change,burn out may happen. The driving circuit must be designed to allow forward voltage only when it is ON or OFF.If the reverse voltage is applied to LED, migration can be generated resulting in LED damage．设计电路时，通过LED电流 不能超过规定的最大值，同时，还需使用保护电阻，否则，微小的电压变化将会引起较大电流变化，可能导致产品损毁。电路设计必须保证只有在开启或者关闭的时候出现正向电压的变化，不要施加反压，否则LED会损坏。

6.Thermal Design is paramount importance because heat generation may result in the LED Characteristics decline,such as brightness decreased,lifetime,Color change and so on.Please consider the heat generation of the LEDs when making the system design.LED 容易因为自身的发热和环境的温度改变而改变，温度升高会降低LED 发光效率及寿命，影响发光颜色，所以在设计时应充分考虑 散热问题。

7.In cases where a minimal level of dirt and dust particles cannot be guaranteed, a suitable cleaning solution must be applied to the surface after the soldering of components. Litong suggests using is opro pylalcohol for cleaning.In case other solvents are used,it must be assured that these solvents do not dissolve the package or resin. Ultrasonic cleaning is not recommended.Ultrasonic cleaning may cause damage to the LED
应用时应特别注意，当对产品洁净度要求较高时回流焊以后需要采用恰当的清洗方式，我们推荐用异丙醇作清洗剂，如需要用到其他清洗剂，必须保证不会破坏封装体，超声清洗可能会对LED 带来损害，不推荐这种清洗方式。

Storage储存

Conditions 种类		Temperature 温度	Humidity 湿度	Time 时间
Storage 储存	Before Opening Aluminum Bag 拆包前	≤30℃	≤75%	Within 1 Year From Date 一年内
	After Opening Aluminum Bag 拆包后	≤30℃	≤60%	24hours 24小时
Baking 烘烤		60±5℃	-	≥24hours 大于24小时

1.Moisture proof and anti-electrostatic package with moisture absorbent material is used, Packaged products have one year to save time.

本产使用密封防潮抗静电袋包装,并附有干燥剂,未开封的产品保存时间一年.

2.Before opening the package, the product should be kept at30℃ or less and humidity less the60%RH.

开封前,产品须存放在温度不高于30℃,湿度不高于60%RH的环境中.

3.After opening the package, the product should be soldered within 24 hours. If not, please store at 30℃ or less and humidity less than 60%RH. It is recommended that the product be operated at the workshop condition of 30℃ or less and humidity less than 60%RH.

开封后,产品必须24小时内使用完(建议工作环境温度不高于30℃,湿度不高于60%),如未使用完,余料须存放在温度不高于30℃,湿度不高于60%的环境中.

4.If the moisture absorbent material has fade away or the LEDs have exceeded the storage time, baking treatment should be performed based on the following condition : 65±5℃for 24 hours.

对于尚未焊接的LED,如果吸湿剂或包装失效,或者产品没有符合以上有效存储条件,烘烤可以起到一定的性能恢复效果.烘烤条件:65±5℃,持续时间24H.

Static Electricity 静电

1.The following procedures may decrease the possibility of ESD damage.
以下操作可降低静电破坏的可能性

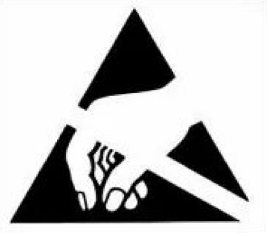

2.Minimize friction between the product and surroundings to avoid static buildup.
将产品和外界之间的摩擦减到最低以避免静电产生.

3.All production machinery and test instruments must be electrically grounded.
所有的产品设备和测试仪器必须接地.

4.Operators must wear anti-static bracelets. 操作人员必须配戴静电环.

5.Wear anti-static suit when entering work areas with conductive machinery.
进入带电设备工作区域时需穿防静电服.

6.All workstations that handle IC and ESD-sensitive components must maintain an electrostatic potential of 150V or less.

所有操作 IC 和 ESD 敏感器件元器件的工作台必须保持低于 150V 的静电保护.

7.If the package is flatulence or damaged, please notify the sales staff to assist.
如果包装胀气或者破损，请通知销售人员协助处理。

8.Similar to most Solid state devices; LEDs are sensitive to Electro-Static Discharge (ESD) and Electrical Over Stress(EOS).像其他的半导体电子器件一样，LED 对静电过流击穿非常敏感，需要做好防护。

9.When using this product, you need to take good care to prevent it from causing harm to eyes and human body. 使用本产品时需要做好防护，防止本产品对眼睛及人体造成伤害。

10.Other points for attention, please Yingfeng to our relevant information.
其它注意事项请参照盈锋相关资料。

Reverse voltage protection 反压保护

In generally the reverse current of LED is very small, it can't effect using the component normally, but when it often suffered the reverse voltage which exceed the limits of the component than it will be damaged, the reverse current increases rapidly causing the string light display gray scale so when designing, please pay attention to control the reverse voltage we suggest the reverse voltage less than 10V.

通常 LED 的反向漏电流都会很小,不会影响正常使用. 如果长期遭受超过其所能承受的反向电压冲击时,LED 会损伤, 反向漏电流会迅速变大,引起显示屏零灰度下串光的发生. 在设计中, 要注意控制反向电压, 建议加在 LED上的反向电压值不超过 10V.

The safe temperature for LEDs working 温度保护

The high temperature will make the LED's Luminous Intensity deceased radically, if LEDs worked in hot environment for a long time, they will be disabled easily. When LEDs are working in a closed array we suggest that the LED's surface temperature should be lower than 55℃ and the leg ' s temperature and the leg's temperature should be lower than75℃

LED 在高温条件下, 衰减会加速,本身应力也会增大, 若长期处于高温环境下, 极容易出现失效. 对于高密度排列使用的情况,建议在使用过程中灯面温度不超过 55℃, 灯脚温度不超过 75℃.

Version History 修订历史

Date日期	Revisor修订者	Version版本	Verifier审核	Remarks备注
2026-01-20	肖珊	1.0	邓炜	版本更新